TIME CONTROL

HP5 SERIES
CYCL-FLEX® RESET TIMER

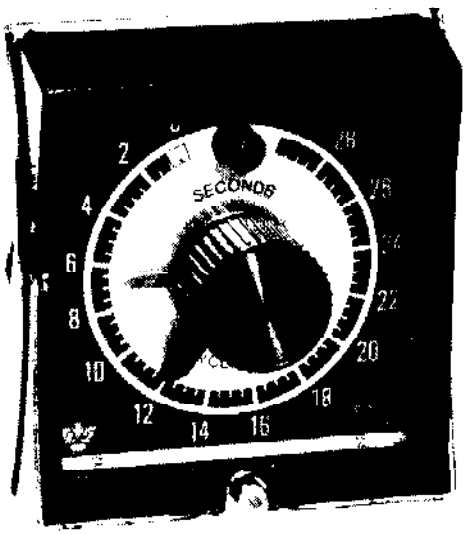

The HP5 CYCL-FLEX® Series Timer is a high quality, synchronous motor driven reset timer housed in the standard CYCL-FLEX® plug-in housing. The HP5 is available in 16 standard time ranges from 5 seconds to 60 hours. Time ranges are knob adjustable and all have a progress pointer. Calibrated dials are highly visible and are 7.85 inches in circumference providing easily read and well spaced calibrations on all ranges. The progress pointer is red and displays the remaining time interval.

A pilot light is provided and indicates when the timer motor is energized. Standard timers are supplied with "power on" clutch operation. As an option, a reverse action clutch is available and will not reset on power failure.

The 15 terminal ABS (U.L. rated 94V-0) molded housing has high impact resistance and will not support combustion.

OPERATION

Application of power to terminals 1, 2, and 11 energizes the clutch coil, closes contacts 9-10 and 6-8 and starts the timing period. At time out, contacts 4-3 close, 11-12 open and the motor stops. The timer will remain in this condition until power is removed from the clutch coil.

Contacts 6-7-8 and 9-10-C are instantaneous contacts and operate with the application of power to the clutch coil. Contacts 3-4-5 and 11-12-A operate at time out with contacts 3-4-5 operating prior to contacts 11-12-A.

SPECIFICATIONS

Time Ranges

CATALOG SYMBOL	DIAL	MINIMUM SETTING	DIAL DIVISIONS	REPEAT ACCURACY
517	5 Sec	1/6 Sec	05 Sec	± .05 Sec
515	10 Sec	1/3 Sec	1/6 Sec	± .05 Sec
514	15 Sec	1/2 Sec	1/4 Sec	± .08 Sec
50	30 Sec	1 Sec	1/2 Sec	± .15 Sec
51	60 Sec	2 Sec	1 Sec	± .3 Sec
52	150 Sec	4.5 Sec	2 Sec	± .75 Sec
53	5 Min	9 Sec	3 Sec	± 1.5 Sec
54	10 Min	20 Sec	10 Sec	± 3 Sec
518	15 Min	30 Sec	15 Sec	± 4.5 Sec
55	30 Min	1 Min	1/2 Min	± 9 Sec
56	60 Min	2 Min	1 Min	± 18 Sec
57	150 Min	4.5 Min	2 Min	± 45 Sec
58	5 Hrs	9 Min	3 Min	± 1.5 Min
59	10 Hrs	20 Min	10 Min	± 3 Min
510	30 Hrs	1 Hr	1/2 Hr	± 9Min
511	60 Hrs	2 Hrs	1 Hr	± 18 Min

Reset Time
1/2 Second at maximum setting

Voltage/Frequency
120 VAC (+10 -15%), 50/60 Hz
240 VAC (+10 -15%), 50/60 Hz

Burden
Motor — 2.45 VA, 120 VAC
Clutch — 10.5 VA

Output Rating
10 Amps, Resistive, 120 VAC
5 Amps, Resistive, 240 VAC

Electrical Lifetime
Contingent on load characteristics. Average contact life at full load is 250,000 operations. At 1 amp load, switch life increases to 5 million cycles. Inrush current should not exceed 10 amps.

Power On Response
28 ms average pick-up
17 ms average drop-out

Operating Temperature
+0° to +140 F (-18° to +60 C)

Vibration
Unaffected by 2.5G sinusoidal vibration magnitudes in both directions of three perpendicular mounting axes imposed from 10 to 900 Hz.

Approximate Weight
2 lb. 14 oz.

Laboratory Testing
U.L. Recognition E61735
U.L. Recognition 71726 (Feature 92 only)
C.S.A. Certification LR-26861
C.S.A. Certification (Feature 92 only)
F.M. Approved 15030

Eagle Signal Controls
Industrial Control Products
8004 Cameron Road, Austin, Texas 78754

TIME CONTROL

OPERATION

STANDARD

Instantaneous contacts 9-10-C and 6-7-8 operate directly with the clutch offering different sequences of operation depending on the control circuit configuration.

Delayed contacts 4-3 and 11-A close and contacts 4-5 and 11-12 open when timer reaches a timed out condition. Contacts 4-5 and 11-12 close and contacts 4-3 and 11-A open when timer is reset.

REVERSE START

Instantaneous contacts 9-10-C and 6-7-8 operate directly with the clutch offering different sequences of operation depending on the control circuit configuration.

Delayed contacts 4-3 and 11-A close and contacts 4-5 and 11-12 open when timer reaches a timed out position. Contacts 4-5 and 11-12 close and contacts 4-3 and 11-A open when timer is reset.

SCHEMATIC DIAGRAM

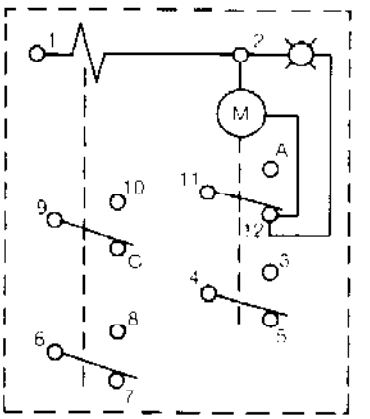

Standard Start	Reset	Timing	Timed Out
CLUTCH	OFF	ON	ON
MOTOR	OPTIONAL	ON	OFF
9-10	O	X	X
9-C	X	O	O
6-8	O	X	X
6-7	X	O	O
4-3	O	O ¦ X	X
4-5	X	X ¦ O	O
11-12	X	X	O
11-A	O	O	X

Reverse Start	Reset	Timing	Timed Out
CLUTCH	ON	OFF	OFF
MOTOR	OPTIONAL	ON	OFF
9-10	X	O	O
9-C	O	X	X
6-8	X	O	O
6-7	O	X	X
4-3	O	O ¦ X	X
4-5	X	X ¦ O	O
11-12	X	X	O
11-A	O	O	X

Switch 3-4-5 is set to operate before switch 11-12-A. The delay between these switches is directly proportional to the timer dial.

DIAL	DELAY ADJ.	DIAL	DELAY ADJ.
5 Sec	25 ms to 75 ms	15 Min	4.5 Sec to 13.5 Sec
10 Sec	50 ms to 150 ms	30 Min	9 Sec to 27 Sec
15 Sec	75 ms to 225 ms	60 Min	18 Sec to 54 Sec
30 Sec	150 ms to 450 ms	150 Min	45 Sec to 135 Sec
60 Sec	300 ms to 900 ms	5 Hr	1.5 Min to 4.5 Min
150 Sec	750 ms to 2.25 Sec	10 Hr	3 Min to 9 Min
5 Min	1.5 Sec to 4.5 Sec	30 Hr	9 Min to 27 Min
10 Min	3 Sec to 9 Sec	60 Hr	18 Min to 54 Min

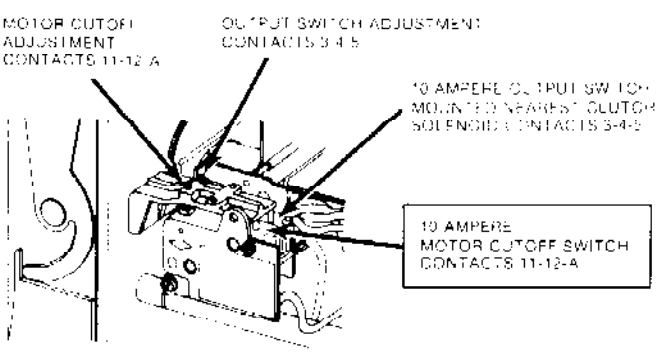

WIRING DIAGRAMS — Bold Lines are Internal Wiring

ON DELAY HP5 CYCL-FLEX® TIMER

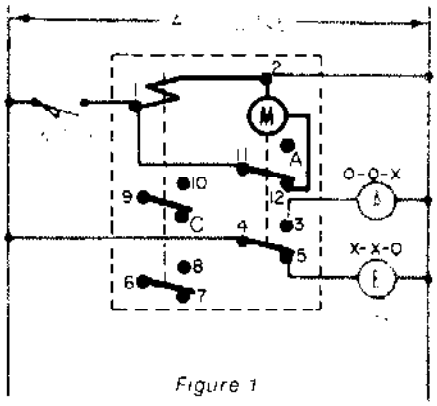

Figure 1

Sustained Control Switch. Close to Start. Open to Reset - Simple delayed closing and opening of load circuits.

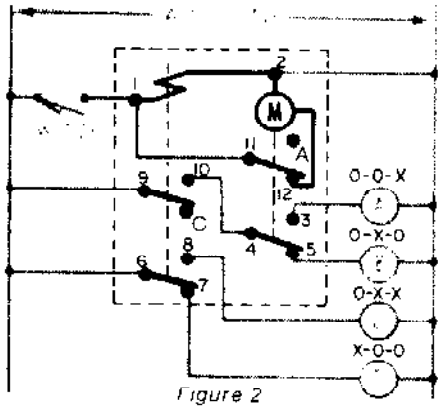

Figure 2

Sustained Control Switch. Close to Start, Open to Reset - Additional load circuit operations obtained by connecting contacts in series.

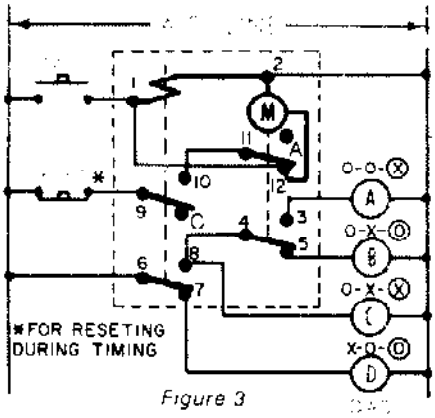

Figure 3

Momentary Control Switch. Close to Start, Resets Automatically - Pushbutton start. Remains in 3rd switch position indicated by Ⓧ or Ⓞ for ½ to 1½% of the dial range.

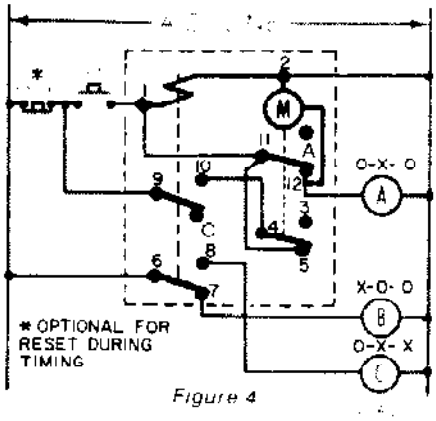

Figure 4

Momentary Control Switch. Close to Start, Resets Automatically - Use when the control switch may not always be opened before end of timing. This circuit insures shutting off timer motor at end of timing.

REVERSE START HP5-01 SERIES CYCL-FLEX TIMER

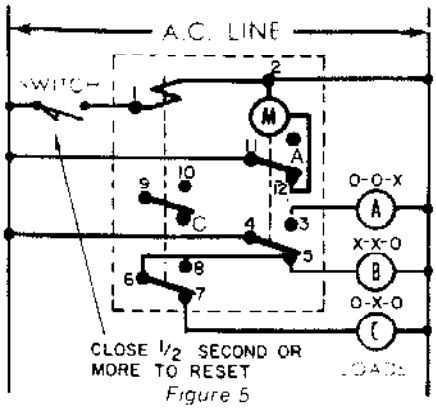

Figure 5

Open Control Switch to Start, Close to Reset - Simple delayed closing and opening of load circuits.

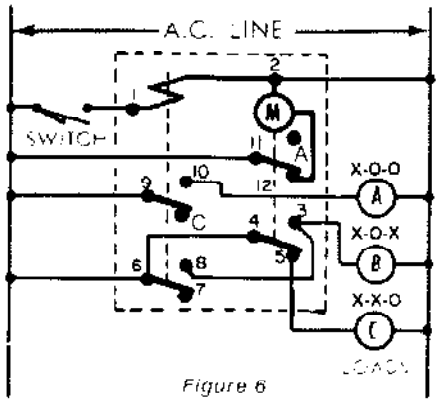

Figure 6

Open Control Switch to Start, Close to Reset - Additional load circuit operations obtained by connecting contacts in series or parallel.

TIME CONTROL

MOUNTING DIMENSIONS

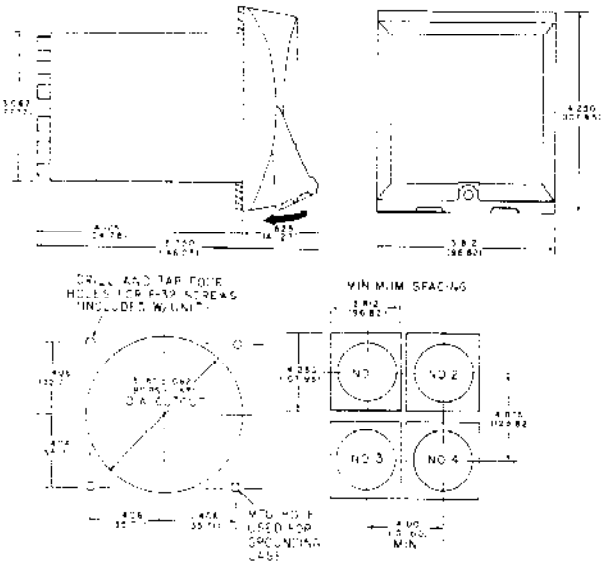

TERMINALS AND WIRING DIAGRAM ON REAR OF TIMER CASE

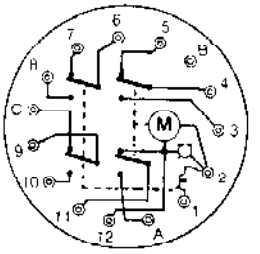

ENCLOSURES

PART NUMBER	NEMA CLASS	DESCRIPTION
HN308	1	Surface Mtg. with terminal block
HN364	1	Surface Mtg. without terminal block
HN368	1A	Dual unit cabinet with 9 position terminal block, timer housings, and DPST toggle switch.
HN370	1A	Dual unit cabinet less unit cases and toggle switch, with 9 terminal block.

ACCESSORIES

PART NUMBER	DESCRIPTION
H-5331	Mounting Brackets 2 req'd per timer
HP50-31	One Hole Mounting Ring
HP50-103	120 VAC 50/60 Hz Repeat Cycle Kit Not applicable w/ Feature 19
HP50-131	CYCL-FLEX Water - Sealed Housing
HP50-133	Surface Mounting Adapter to use in place of Brackets
HP50-295	Dial Lock

ORDERING INFORMATION

HP5 15 A6 01

TIME RANGE

SYMBOL	RANGE	SYMBOL	RANGE
17	0 5 Sec	18	0-15 Min
15	0-10 Sec	5	0-30 Min
14	0-15 Sec	6	0-60 Min
0	0-30 Sec	7	0-150 Min
1	0-60 Sec	8	0-5 Hr
2	0-150 Sec	9	0-10 Hr
3	0-5 Min	10	0-30 Hr
4	0-10 Min	11	0-60 Hr

VOLTAGE & FREQUENCY

SYMBOL	VOLTAGE & HZ
A5	120V 50Hz
A6	120V 60Hz
B5	240V 50Hz
B6	240V 60Hz

FEATURES

SYMBOL SUFFIX	DESCRIPTION
01	Reverse Clutch Arrangement
05	Chrome Plated Bezel
07	Dial Lock
15	Stainless steel handle and housing plate
19	Revision for mtg to HN383 explosion proof cabinet Add when purchased without cabinet. DOES NOT have Pilot Light
22	Water resistant window and housing.
92**	Enclosed in HN383 Explosion Proof Cabinet

The Following Bulletins Are Also Available.
125C-3 Lubrication Instructions
125E Timer Parts List

****Laboratory Testing**
U.L. Recognition E61735
C.S.A. Certification LR45132-1

Printed U.S.A. 0793