PARTS LIST
HP5/HP6 CYCL-FLEX®
Reset Timer

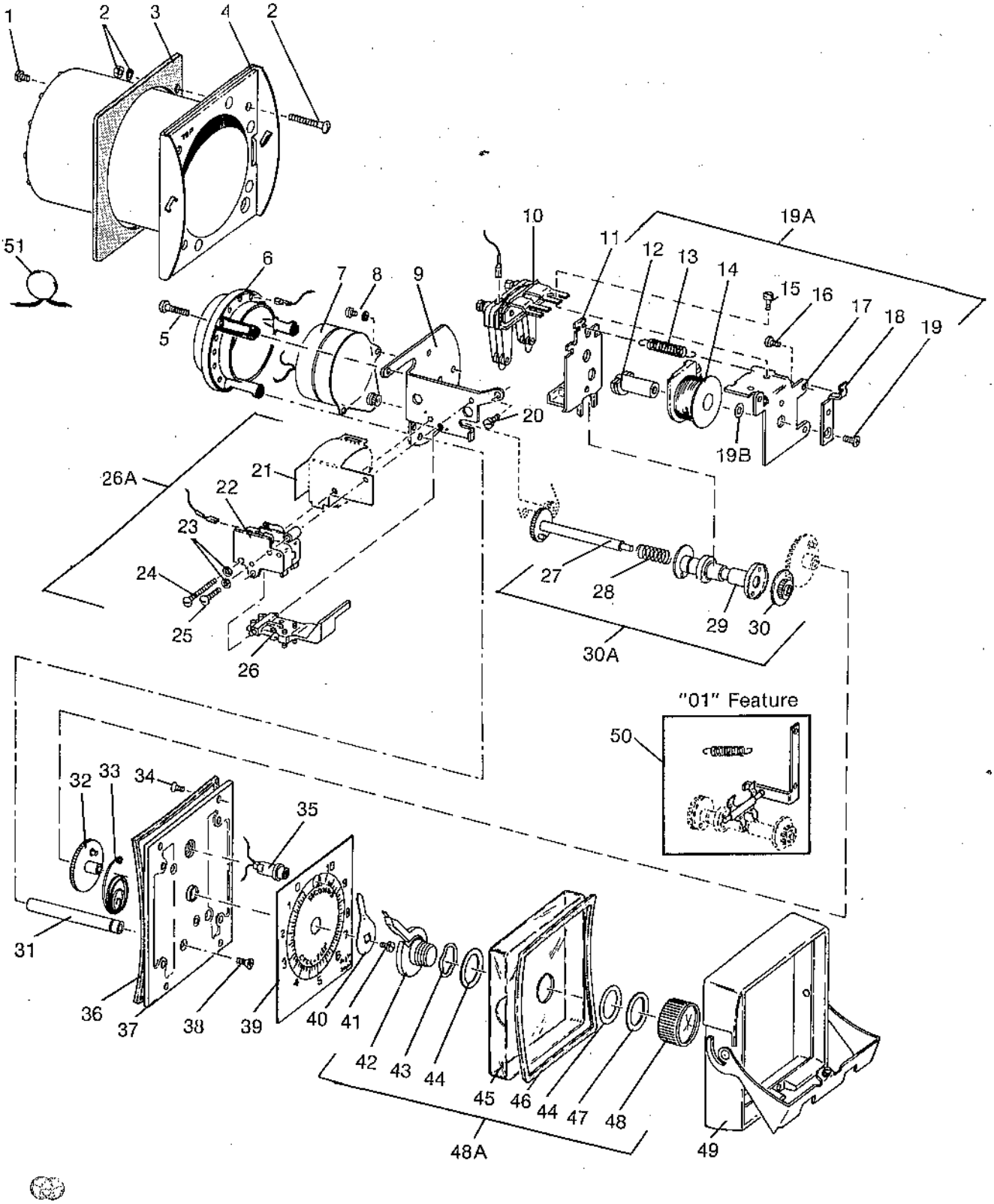

Item	Description
1	0123214 6-32 x ¼ Screw
2	0196403 Mounting screw package
3	PBG-58 Gasket
4	HP50-130 Housing assembly
5	0128717 6-32 x 7/16 Pan head screw
6	HP50-128 Terminal ring assembly (With loose terminals - replacement only) PDM-590 (Without terminals)
7	Motor - See Chart
8	0144930 Sems
9	H-11535 Motor mounting plate for up to 5 min. H-10437 Motor mounting plate for 10 min. - 60 hr.
10	HP50-140 Replacement contact stack without wires. For contact stack with wires, order HP50-129. (Excluded on HP6 - and assorted wiring)
11	HP50-62 Armature assembly
12	HP50-6 Coil core assembly
13	PES-166 Armature spring PES-253 used with 01 feature PES-394 Used with 04 feature
14	Coil HP50-4 120V 50/60Hz HP50-86 240V 50Hz HP50-22 240V 60Hz
15	0123213 6-32 x 3/16 Screw
16	0132709 6-32 x ⅜ Screw
17	H-7634 Magnet frame
18	H-7521 Spring Bracket
19	0119006 8-32 x ⅜ Screw
19A	HP50-45 Coil core and magnet assembly Includes Items 12 - 17 - 18 - 19 - 19B
19B	H-1282 Washer
20	0123213 6-32 x 3/8 Screw
21	PZA-79 Insulator
22	PAS-561 Switch module
23	0157001 #2 Shakeproof washer
24	0116013 2-56 x 13/16 Screw
25	0116014 2-56 x ½ Screw
26	HP50-108 Assembly
26A	HP50-109 Switch Kit Includes items 22 - 26

Item	Description
27	HP50-7 Clutch shaft assembly
28	PES-167 Clutch spring
29	HP50-8 Spool assembly
30	HP50-5 Clutch disc and gear assembly
30A	HP50-46 Complete clutch assembly
31	H-7621 Post
32	HP50-1015 Pointer shaft and gear assembly
33	PES-28 Reset spring
34	0133409 6-32 x ⅜ Screw
35	PFP-118 120 V Pilot light PFP-119 240 V Pilot light
36	1105-0281 Gasket
37	HP50-17 Front plate assembly
38	0118817 6-32 x ¼ Screw
39	Dial - See Chart
40	H-10441 Progress pointer
41	0123212 6-32 x 3/16 Screw
42	PDM-415 Setting pointer
43	H-11147 Spring washer
44	H-6556 Washer
45	PDM-440 Window
46	PBG-83 Gasket
47	0158634 Valox washer
48	PBK-86 Knob (0135604 set screw)
48A	HP50-294 Window-Knob-Pointer assembly Includes items 42 - 48
49	HP50-290 Bezel and handle assembly HP50-96 Chrome bezel and handle assembly Feature "05"
50	HP50-32 "01" Kit/Reverse clutch Includes: PES-253 Spring, H-7655 Bracket H-7656 Shaft, H-7823 Lift fork, PER-49 Retainer ring
51	PGR-204 MOV 240 Volts 50Hz Used with 50Hz Permanent magnet motors. Wire across terminals 2 and 12

LUBE AND MAINTENANCE GUIDE
Use light instrument oil on all rotary shafts.
Clean and lubricate semi-annually for light duty, quarterly for heavy duty.

PRINTED U.S.A. REVISED 9/86

Eagle Signal Controls
A Division of Mark IV Industries, Inc.
8004 Cameron Road, Austin, Texas 78753 U.S.A.

MOTOR (Ref 7) and DIAL (Ref 39) CHART

Symbol	Time Range	Motor RPM	MOTORS			DIALS	
			120V 50 or 60 Hz	240V 60 Hz	240V 50 Hz	60 Hz	50 Hz
17	5 Sec.	120	PMM-14	PMM-15	PMM-15	PAN-998	PAN-1024
15	10 Sec.	60	PMM-5	PMM-6	PMM-6*	PAN-1007	PAN-1021
14	15 Sec.	40	PMM-7	PMM-8	PMM-8*	PAN-1002	PAN-1019
0	30 Sec.	20	PMM-1	PMM-2	PMM-2*	PAN-1010	PAN-1016
1	60 Sec.	10	PMH-63	PMH-64	PMH-64	PAN-1004	PAN-1013
2	150 Sec.	4	PMH-66	PMH-67	PMH-67	PAN-1027	PAN-997
3	5 Min.	2	PMH-70	PMH-72	PMH-72	PAN-999	PAN-1025
4	10 Min.	1	PMH-79	PMH-82	PMH-82	PAN-1008	PAN-1022
18	15 Min.	2/3	PMH-76	PMH-75	PMH-75	PAN-1003	PAN-1020
5	30 Min.	1/3	PMH-91	PMH-94	PMH-94	PAN-1011	PAN-1017
6	60 Min.	1/6	PMH-97	PMH-100	PMH-100	PAN-1005	PAN-1014
7	150 Min.	1/15	PMH-115	PMH-118	PMH-118	PAN-1028	PAN-1001
8	5 Hr.	1/30	PMH-127	PMH-130	PMH-130	PAN-1000	PAN-1026
9	10 Hr.	1/60	PMH-133	PMH-136	PMH-136	PAN-1009	PAN-1023
10	30 Hr.	1/180	PMM-48	PMM-49	PMM-49*	PAN-1012	PAN-1018
11	60 Hr.	1/360	PMM-50	PMM-51	PMM-51*	PAN-1006	PAN-1015

* Permanent magnet motor (Mallory) requires PGR-204 MOV (GE #V275LA20, or equivalent) across motor for 240V 50 Hz applications.